Laser line wavelength sensor based in a dual-wavelength fiber laser with a Hi-Bi loop Sagnac interferometer

M. Durán Sánchez*[a], R. I. Álvarez Tamayo[a], O. Pottiez[e], E. A. Kuzin[b], B. Ibarra-Escamilla[b], A. González-García[c] and A. Barcelata Pinzón[a]

[a]Mecatrónica, Universidad Tecnológica de Puebla, Ant. Camino a la Resurrección N°1002-A Parque Industrial, Puebla, Pue.72300, México

[b]Departamento de Óptica, Instituto Nacional de Astrofísica, Óptica y Electrónica, Luis Enrique Erro No. 1, Puebla, Pue. 72000, México

[c]Instituto Tecnológico Superior de Guanajuato, Carretera Estatal Guanajuato-Puentecillas, C.P. 36262, Guanajuato, Gto. México

[e]Centro de Investigaciones en Óptica, Fiber Optics Department, Lomas del Bosque N. 115, León, Gto. 37150, México

ABSTRACT

We present an experimental method for straight forward dual wavelength Erbium doped fiber linear cavity laser characterization based in laser line spectrum behavior due to the Hi-Bi FOLM transmission spectrum wavelength displacement by temperature variations in the fiber loop. The laser operation is for a single and dual mode, obtained through the adjustment of the cavity losses by the Sagnac interferometer spectrum wavelength displacement due to the temperature variation of the fiber loop. The method allow determine the laser operation from a single emission line and a two emission lines simultaneously through the Sagnac transmittance spectrum optical power variations measurement due to wavelength spectrum shifting for each laser wavelength generated separately and overlapping these obtained spectrums.

1. INTRODUCTION

Multi-wavelength fiber lasers with simultaneous and selectable laser lines have attracted interest in the last decade because of their potential applications as light sources for optical systems applicable in optical fiber sensors, optical instrumentation and communication systems [1-3], among others, due to its advantages such as operation at multiple wavelengths, low cost and compatibility with optical fiber systems [1-4]. Moreover, optical fiber Bragg gratings (FBG) are widely used as narrow bandwidth reflectors for generated laser wavelength selection in optical fiber lasers design and implementation, making them ideal devices to perform this task because of its advantages including fiber compatibility, easy to use and low cost. Several single or simultaneous multiple-wavelength fiber lasers have been reported, including FBGs cascade arrangements [1], two separate cavities using FBGs as a medium gain [4], FBGs written in multimode fiber [5] and recently the use of FBGs written in high birefringence fiber [6-8], due to its special characteristics suitable for the simultaneous generation of laser lines. Furthermore, fiber lasers that use Erbium-doped fiber (EDF) have difficulty obtaining simultaneous emission lines, because EDF is a homogeneous gain medium at room temperature causing a competition mode between the emission lines. Different methods for adjusting the competition between laser wavelengths based on the setting of the losses in the cavity have been reported [1-10]. We have previously reported a cavity loss adjusting method incorporating an optical fiber Sagnac interferometer with high birefringence (Hi-Bi) fiber optical loop mirror (FOLM) within the fiber laser cavity to obtain a dual-wavelength fiber laser (DWFL) [11-14].The FOLM acts as a wide bandwidth reflector with a periodic wavelength reflection spectrum used to adjust the losses within the laser cavity. This technique have been theoretically and experimental analyzed and implemented [14]. This experimental setup requires very expensive measurement systems, such as optical spectrum analyzers (OSA), monochromator, and RF analyzer spectrum. In this paper we propose the experimental verification of dual-wavelength simultaneous laser emission lines through the measurement and results characterization of Hi-Bi FOLM transmission

*manuel.duran@utpuebla.edu.mx

Fiber Optic Sensors and Applications XI, edited by Henry H. Du, Gary Pickrell, Eric Udd, Christopher S. Baldwin, Jerry J. Benterou, Anbo Wang, Proc. of SPIE Vol. 9098, 909816 · © 2014 SPIE
CCC code: 0277-786X/14/$18 · doi: 10.1117/12.2050742

spectrum due spectrum wavelength displacement by temperature variations for both separately wavelengths with in within the cavity and the overlap of both measurements, using a single optical power meter.

2. EXPERIMENTAL SETUP

Figure 1 shows the linear cavity fiber laser experimental setup. The linear cavity is form by a Hi-Bi FOLM, used as a broadband reflector at the end of the cavity and a pair of fiber Bragg grating with a reflectivity of 60% at 1538-nm and 1548-nm for FBG1 and FBG2. FBGs act as reflectors to the center wavelength. The cavity is completed by a WDM 980/1550 and 1-m of EDF. The Hi-Bi FOLM is formed by a 50/50 coupler and a 28-cm Hi-Bi fiber segment forming a loop between the coupler output ports. The FOLM acts as a periodical wide band reflector due to the Hi-Bi fiber. The period of the spectrum is determined by the loop fiber length and the FBG selected wavelength through the FOLM resulting in a 20.8 nm wavelength and 13°C temperature periods. The wavelength spectrum can be displaced by temperature variations applied in the Hi- Bi loop by a Peltier device using a temperature controller. The FOLM wavelength spectrum shift is used to adjust the losses within the laser cavity equalizing reflectance gains of both FBGs, allowing the simultaneous emission of laser lines at center wavelengths of the FBGs. The EDF is pumped through the WDM coupler with a 60mW laser diode at 980nm. The laser emission spectrum is measured at 50/50 coupler output port by a monochromator, measured by a photodetector and finally the laser output is monitored by an oscilloscope. Similarly, this output port is used to measure the optical power spectrum of transmittance of the Hi-Bi FOLM, due to the temperature shifted.

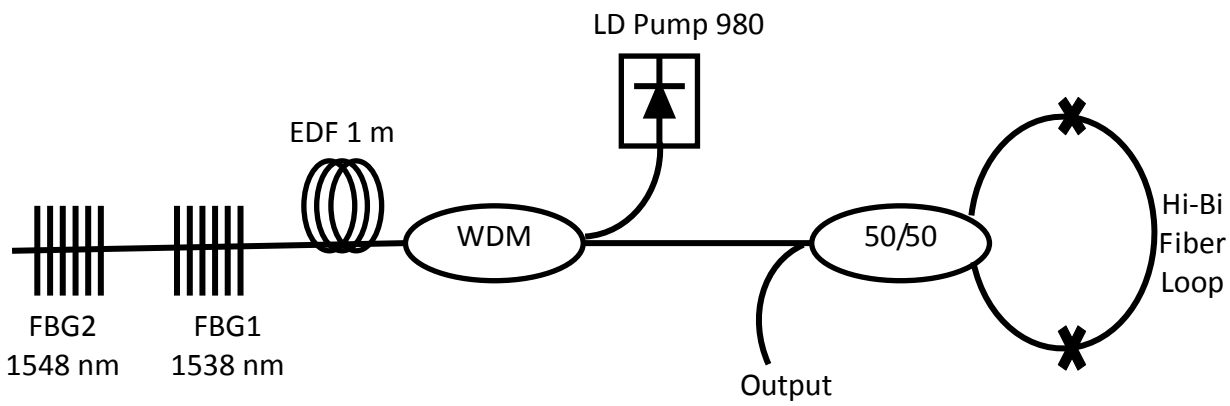

Fig. 1. Experimental setup of the laser with selectable dual wavelength, based on Bragg gratings and a Hi-Bi FOLM

3. EXPERIMENTAL RESULTS AND DISCUSSIONS

Figure 2 shows the Hi-Bi FOLM transmission spectra with 60 mW of pump power, which stands above the threshold for EDF amplification. The measurements were performed by removing one FBG at time to obtain single laser measurements FBG from the experimental setup resulting in a Hi-Bi FOLM spectra for individual laser generation measurement of each generated wavelength. The measurements were performed with an optical power meter at the 50/50 coupler output port and at the center wavelength of the measured FBG. Hi-Bi FOLM transmission spectrum is wavelength shifted by temperature variations in the range of 10°C to 32°C and the optical power was measured at 0.2°C intervals of temperature variations in the loop. We know from the Hi-Bi FOLM characterization the displacement is 1.71-nm/°C [11]. Figure 2a shows the optical power measured points for the 1538 nm generated laser line using only FBG1 within experimental setup. Similarly, Figure 2b show the results of the single laser wavelength measured at 1548 nm generated using only FBG2 within the setup. As it is shown, the reconstruction of the spectra obtained is similar to

the cosine profile characterization reported in Ref. [14], taking into account that the results of Fig. 2 shows an optical power spectra in a function of the temperature instead of power spectra respect to the wavelength. The measurement is wavelength fixed to the center wavelength of each FBG where the laser emission is generated. The temperature period is approximately 13°C, similar to the results obtained for the Hi- Bi FOLM characterization.

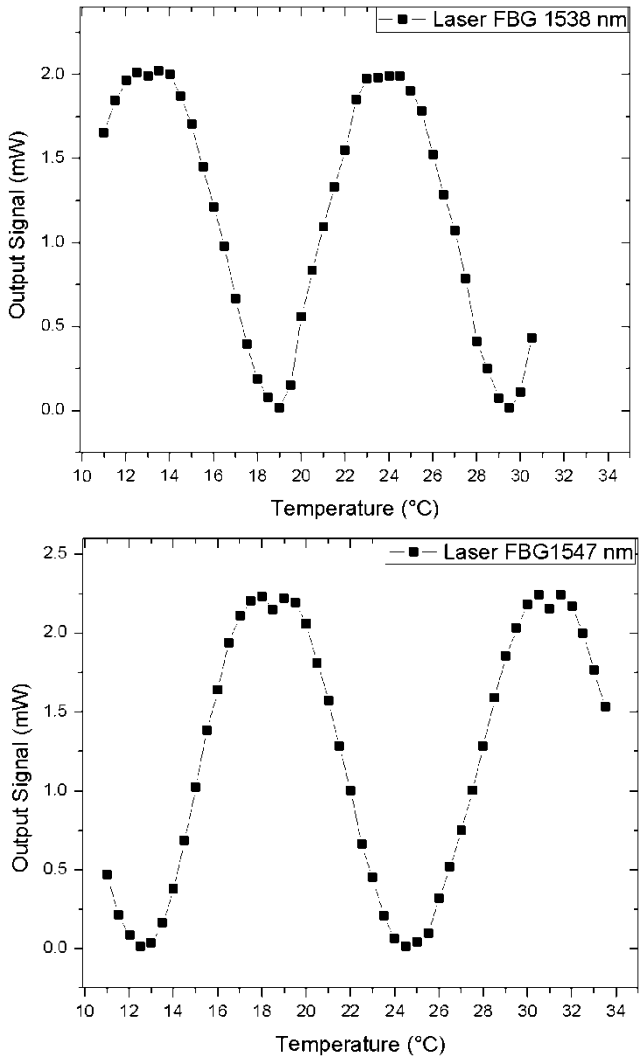

Fig. 2.Hi-Bi FOLM transmission spectrum due to the Hi-Bi fiber loop temperature variations for a single wavelength laser emission, (a) With FBG1 at 1538nm and (b) at 1547 nm with FBG2.

Figure 3 shows the lasing spectrum for each wavelength of the single wavelength lasers presented in Fig. 2. The measurement of the emission line spectrum is measured at the output port of the 50/50 coupler through a monochromator with a resolution of 0.2 nm, a photodetector and a digital oscilloscope. The monochromator sweeps in wavelength range from 1536 to 1551 nm. Fig. 3a shows the laser line generated for the FBG1 reflection with a center wavelength at 1538 nm. Fig 3b shows a similar result for FBG2 at 1548 nm laser line generation.

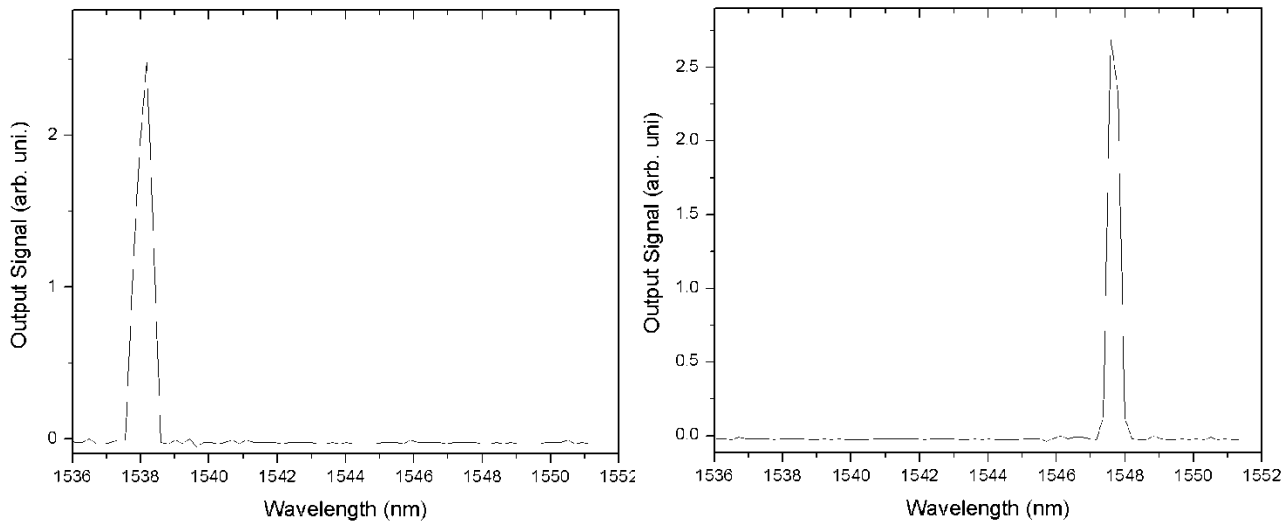

Fig. 3. Laser emitting a single wavelength, (a) to FBG1 to 1538nm and (b) to 1547 nm for FBG2.

Figure 4 shows the simultaneous dual-wavelength laser emission with similar optical power, adding both FBGs in the experimental setup. As it is shown emission lines at 1538 nm and at 1548nm due to the FBG1 and FBG2 reflections respectively are presented. To obtain simultaneous dual-wavelength emission lines is necessary perform a Hi-Bi FOLM wavelength spectrum displacement adjustment by varying temperature of fiber loop, as a result a temperature in which the losses within the cavity are compensated for both laser lines is set. The temperature in which Hi-Bi FOLM wavelength displacement generates the dual-wavelength laser emission is 21.3°C. The measurement of Fig. 4 is useful to proof that there is dual-wavelength laser emission specifically at this temperature.

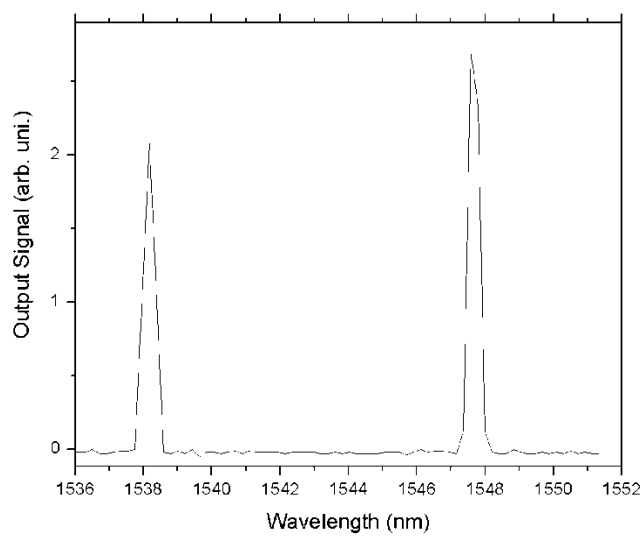

Fig. 4.Simultaneous dual-wavelength laser optical power at 21.3°C.

Figure 5 shows the Hi-Bi FOLM transmission spectrum measurement, this procedure was also used to obtain the graphs of Fig. 2. In Fig. 5 for measurements, we used both FBG1 and FBG2 in the same side forming the laser cavity, by Fig 4 results the Hi-Bi FOLM loop temperature required to obtain simultaneous dual-wavelength laser emission is 21.3°C. As Fig. 5 shows, a periodical optical power spectrum dependent of temperature (in the range from 10°C to 32°C with 0.2°C step) is obtained. The transmission spectrum obtained maintains a period in which optical power peaks is present. The second peak is located around 21.3°C in which maximum optical power represents the temperature at which two laser lines are generated simultaneously.

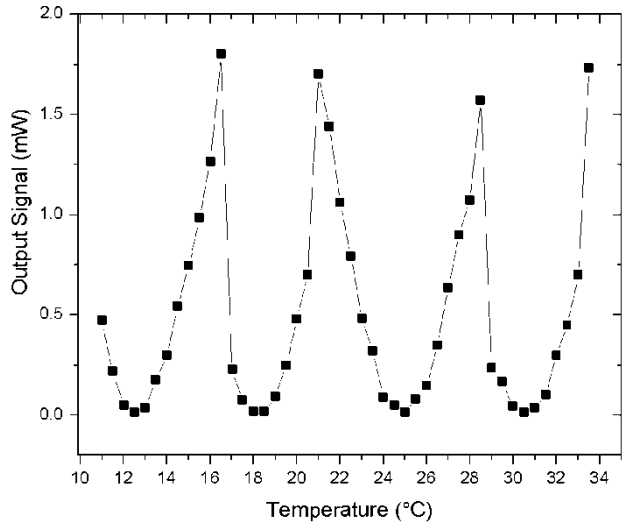

Fig. 5.Hi-Bi FOLM Transmission spectrum due to temperature variation in Hi-Bi loop for dual-wavelength laser emission.

Figure 6 shows the overlapping of Hi-Bi FOLM transmission spectra due to Hi-Bi FOLM fiber loop temperature variation for individual laser emission lines obtained in Fig. 3(a) and Fig. 3(b) and for simultaneous dual-wavelength laser emission obtained in Figure 5.

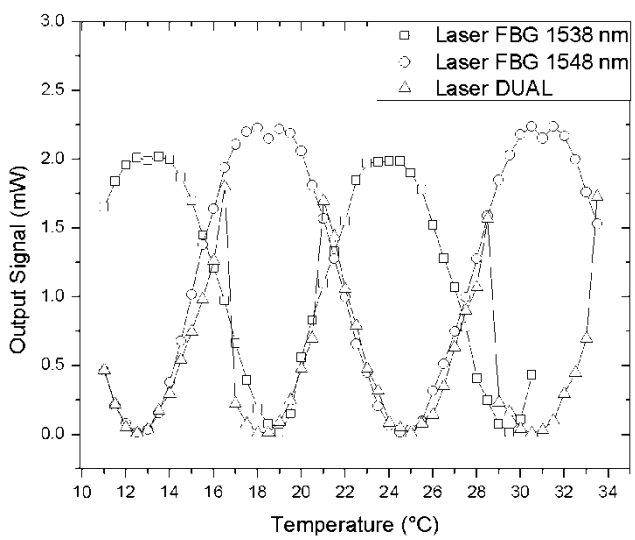

Fig. 6. Overlap of Hi-Bi FOLM transmission spectrums due to variation of temperature loop operation of a single laser wavelength for FBG1 (square), FBG2 (rhombus) and dual operation (triangle).

As can be seen, the optical peak power of emission spectrum for a simultaneous dual emission lines is approximately located at the same temperature of the point of intersection between both single laser emission spectra. We can also see that this behavior is consistent in the first half period intersection and dual laser emission line spectrum at approximately 16°C, where simultaneous dual emission and a balance between emission lines is present. The second half of the corresponding period line with the laser line generated by FBG1 which is winning the competition in this temperature range until it returns to equilibrium exist at the next intersection which has already been shown near 23°C. As it is shown, a third equilibrium point occurs when the peak power for dual-wavelength laser emission around 29°C, where single lasing for FBG1 and FBG2 is also obtained. These temperatures in which simultaneous dual-wavelength laser emission occurs have been experimentally verified by the monochomator wavelength sweeping method to proof the proposed method is reliable to determine a specific Hi-Bi FOLM fiber loop temperature in which dual-wavelength laser emission is obtained.

4. CONCLUSION

Determination of the Hi-Bi FOLM fiber loop temperature in which simultaneous dual-wavelength laser emission for a EDF linear cavity dual-wavelength fiber laser occurs is experimentally demonstrated by the characterization and overlapping of separately Hi-Bi FOLM transmission spectrum by Hi-Bi loop temperature variation for single laser line emission generated by FBG1 and FBG2. The temperature in which simultaneous dual laser emission is obtained, is located in the intersection of both single laser Hi-Bi FOLM transmission spectrums. This simple and straight forward method can be determined the Hi-Bi loop temperature in which the losses within the cavity are adjusted to generate two laser emission lines simultaneously when both FBGs are introduced into the experimental setup. Similarly, measure of Hi-Bi FOLM transmission spectrum with both FBGs introduced into the experimental setup determine Hi-Bi fiber loop temperature in which dual-wavelength laser emission is generated and it occurs at the Hi-Bi loop temperature where the measured optical power is maximal. It is also observable that the necessary conditions to obtain simultaneous dual-wavelength laser emission are periodical and the results shown three different loop temperatures in which it is present, at approximately half of the Hi-Bi FOLM spectrum period of 13°C. The presented work also represents a simple method to understand and characterize a continuous wave dual-wavelength linear cavity EDF fiber laser behavior with similar characteristics to the proposed design without the use of expensive and specialized equipment.

1. ACKNOWLEDGEMENTS

This work has been supported by CONACYT grant CB-2010-151434.

2. REFERENCES

[1] Q. Mao, J.W.Y. Lit, “Switchable multi-wavelength erbium-doped fiber laser with cascaded fiber grating cavities,” IEEE Photon. Technol. Lett. 14 5 (2002) pp. 612–614.

[2] Y. G. Han, S. B. Lee, C-S. Kim, M.Y. Jeong, “Tunable optical add-drop multiplexer based on long-period fiber gratings for coarse wavelength division multiplexing systems,” Opt. Lett. 31 6 (2006) pp. 703–705.

[3] Y.G. Han, S.B. Lee, D.S. Moon, and Y. Chung, “Investigation of a multiwavelength Raman fiber laser based on few-mode fiber Bragg gratings,” Opt. Lett. 30 17 (2005) pp. 2200–2202.

[4] Y.Z. Xu, H.Y. Tam, W.C. Du, and M.S. Demokan, "Tunable dualwavelength-switching fiber grating laser," IEEE Photon. Technol. Let.t 10 (1998) pp. 334–336.

[5] X.H. Feng, Y.G. Liu, S.G. Fu, S.Z. Yuan, and X.Y. Dong, "Switchable dual wavelength Ytterbium-doped fiber laser based on a fewmode fiber grating," IEEE Photon. Technol. Lett. 16 (2004) pp. 762–764.

[6] J.H. Cordero, V.A. Kozlov, A.L.G. Carter, and T.F. Morse, "Fiber laser polarization tuning using a Bragg grating in a Hi-Bi fiber," IEEE Photon. Technol. Lett. 10 (1998) pp. 941–943.

[7] C.L. Zhao, X.F. Yang, J.H. Ng, X.Y. Dong, X. Guo, X.Y. Wang, X.Q. Zhou, and C. Lu, "Switchable dual-wavelength erbium-doped fiber-ring lasers using a fiber Bragg grating in high-birefringence fiber," Microwave Opt. Technol. Lett. 41 (2004) pp. 73–75.

[8] X.J. Jia, Y.G. Liu, L.B. Si, Z.C. Guo, S.G. Fu, G.Y. Kai, and X.Y. Dong, "A tunable narrow-line-width multi-wavelength Er-doped fiber laser based on a high birefringence fiber ring mirror and an auto-tracking filter," Opt. Commun. 281 (2008) pp. 90–93.

[9] Y. Han, J. H. Lee, "Switchable dual wavelength Erbium-doped fiber laser at room temperature," Microwave Opt. Technol. Letters 49 (2007) pp. 1433-1435.

[10] J. Qian, J. Su, L. Hong, "A widely tunable dual-wavelength erbium-doped fiber ring laser operating in single longitudinal mode," Opt. Comm. 281 (2008) pp. 4432-4434.

[11] M. Durán-Sánchez, A. Flores-Rosas, R. I. Álvarez-Tamayo, E. A. Kuzin, O. Pottiez, M. Bello-Jimenez and B. Ibarra-Escamilla, "Fine adjustment of cavity loss by Sagnac loop for a dual wavelength generation," Laser Physics 20 5 (2010) pp. 1270-1273.

[12] R. I. Álvarez-Tamayo, M. Durán-Sánchez, O. Pottiez, E. A. Kuzin, B. Ibarra-Escamilla, "Tunable dual-wavelength fiber laser based on a polarization-maintaining fiber Bragg grating and a Hi-Bi fiber optical loop mirror," Laser Physics 21 11 (2011) pp. 1932-1935.

[13] R. I. Álvarez-Tamayo, M. Durán-Sánchez, O. Pottiez, B. Ibarra-Escamilla, J. L. Cruz, M. V. Andrés, E. A. Kuzin, "A dual-wavelength tunable laser with superimposed fiber Bragg gratings," Laser Phys. 23 5 (2013) pp. 055104.

[14] R. I. Álvarez-Tamayo, M. Durán-Sánchez, O. Pottiez, E. A. Kuzin, B. Ibarra-Escamilla and A. Flores-Rosas, "Theoretical and experimental analysis of tunable Sagnac high-birefringence loop filter for dual-wavelength laser application," Applied Optics 50 3 (2011) 253-260.